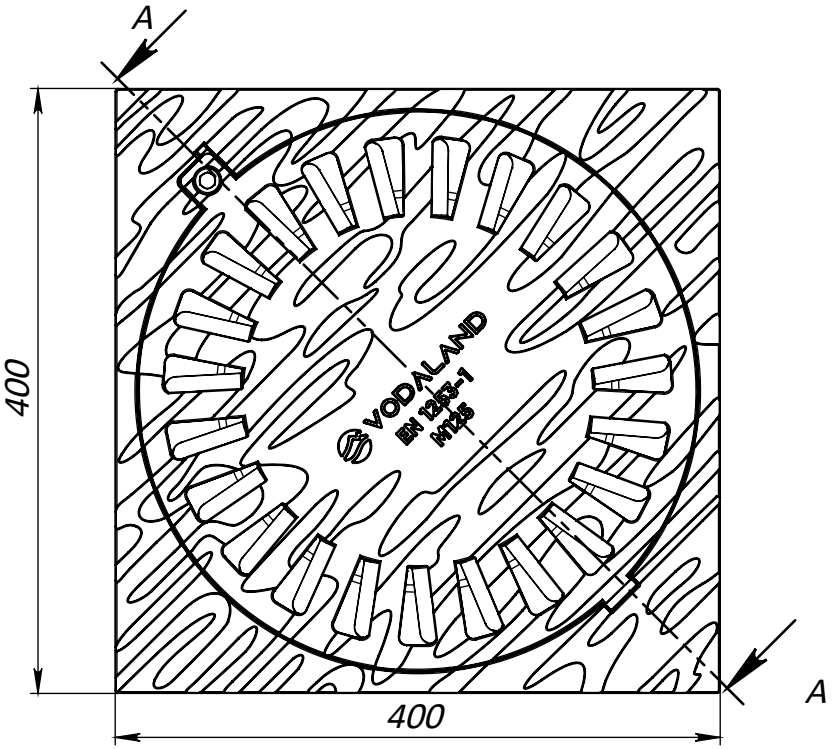

A-A

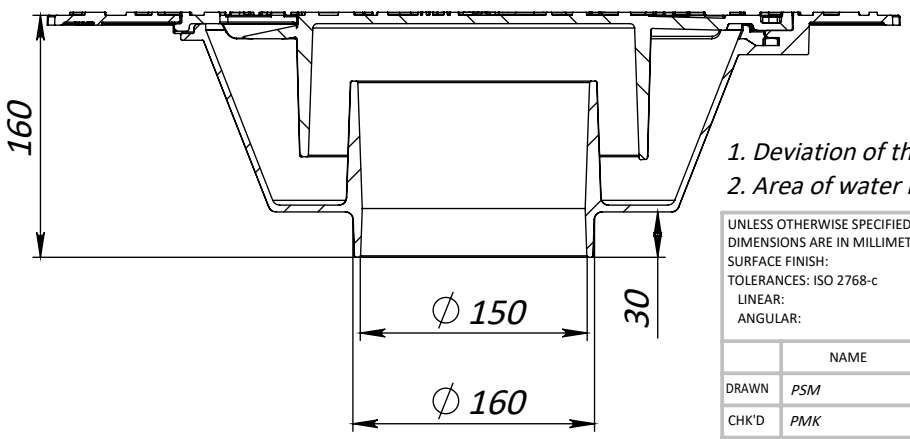

1. Deviation of the actual weight of the nominal can be up to 10%
2. Area of water intake slots 223.33 sq cm

UNLESS OTHERWISE SPECIFIED: DIMENSIONS ARE IN MILLIMETERS SURFACE FINISH: TOLERANCES: ISO 2768-c LINEAR: ANGULAR:	FINISH:				DO NOT SCALE DRAWING	REVISION
					VODALAND	
	NAME	SIGNATURE	DATE		TITLE:	
DRAWN	PSM		05.05.25		Cast iron drain point 400x400 square with lock	
CHK'D	PMK					
APPV'D						
MFG						
Q.A				MATERIAL: Cast iron	ARTICLE: 3335416-3	A4
				WEIGHT: 18.68 kg	SCALE: 1:5	SHEET 1 OF 1